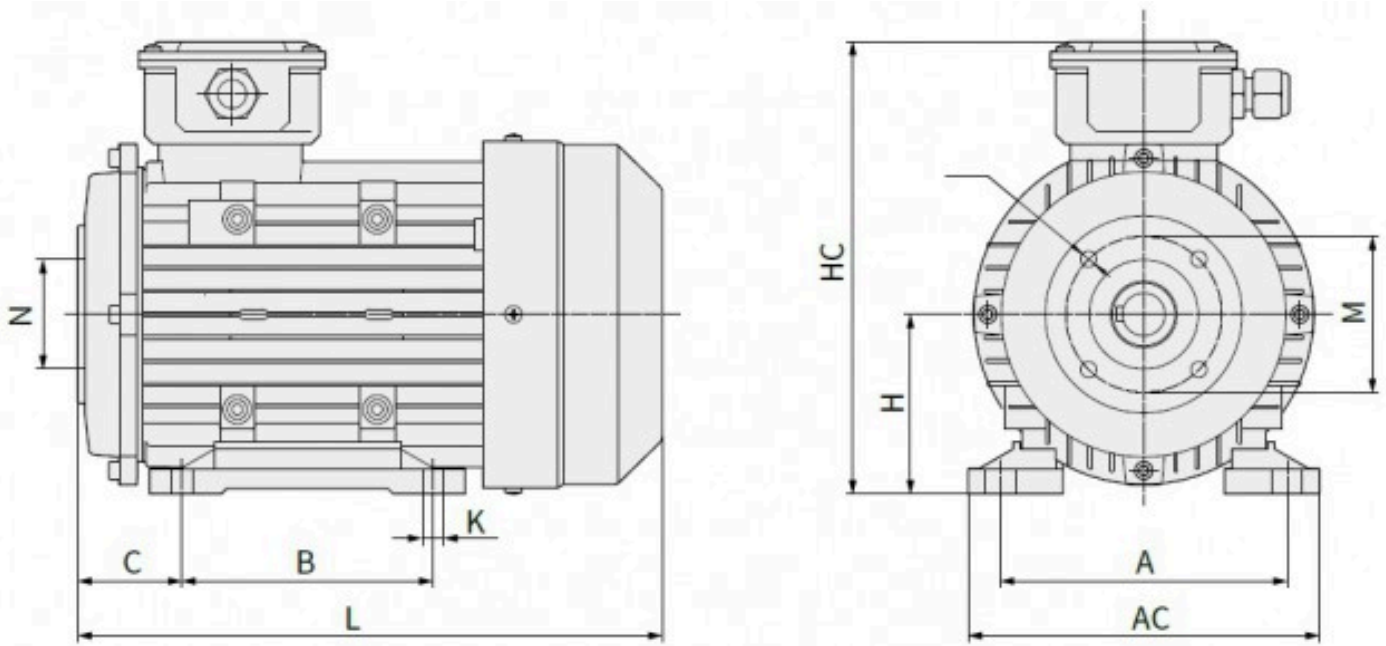

Frame Size	Flange			Frame						
	M	N	S	A	AC	B	H	HC	L	K
100L	75/87	90/61	9	160	255	140	100	240	315	11