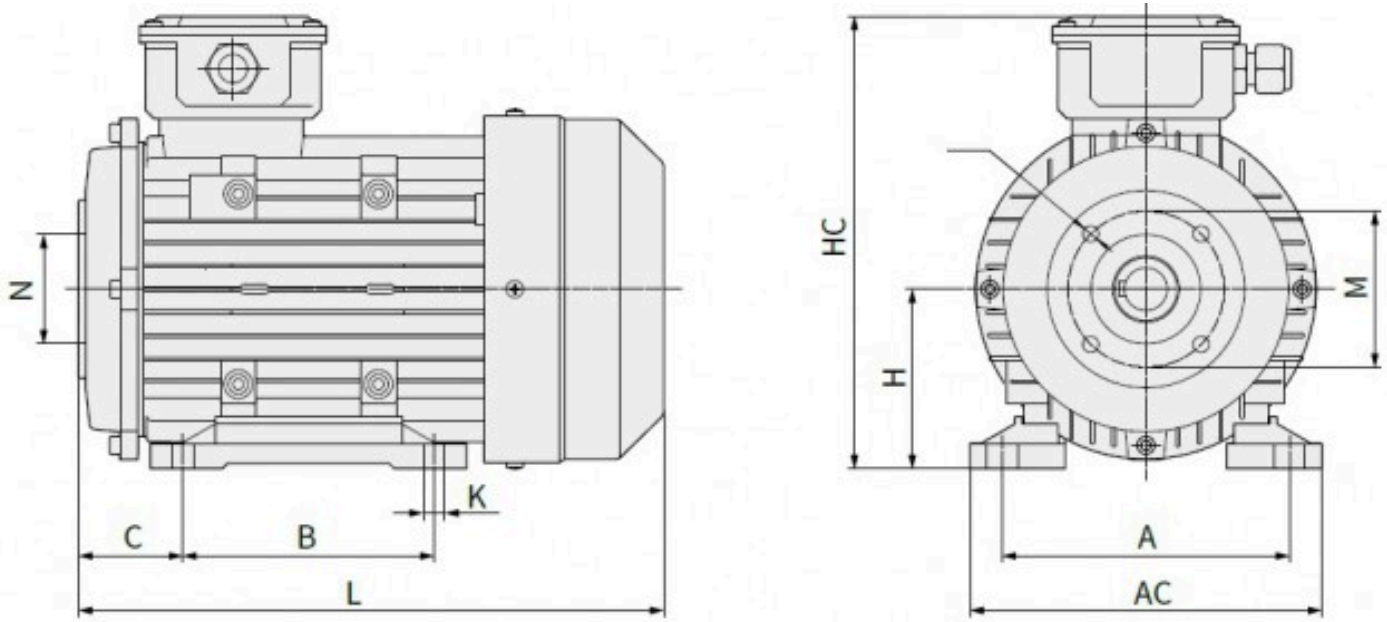

Frame Size	Flange			Frame						
	M	N	S	A	AC	B	H	HC	L	K
112M	75/87	90/61	9	216	326	140	132	265	330	11