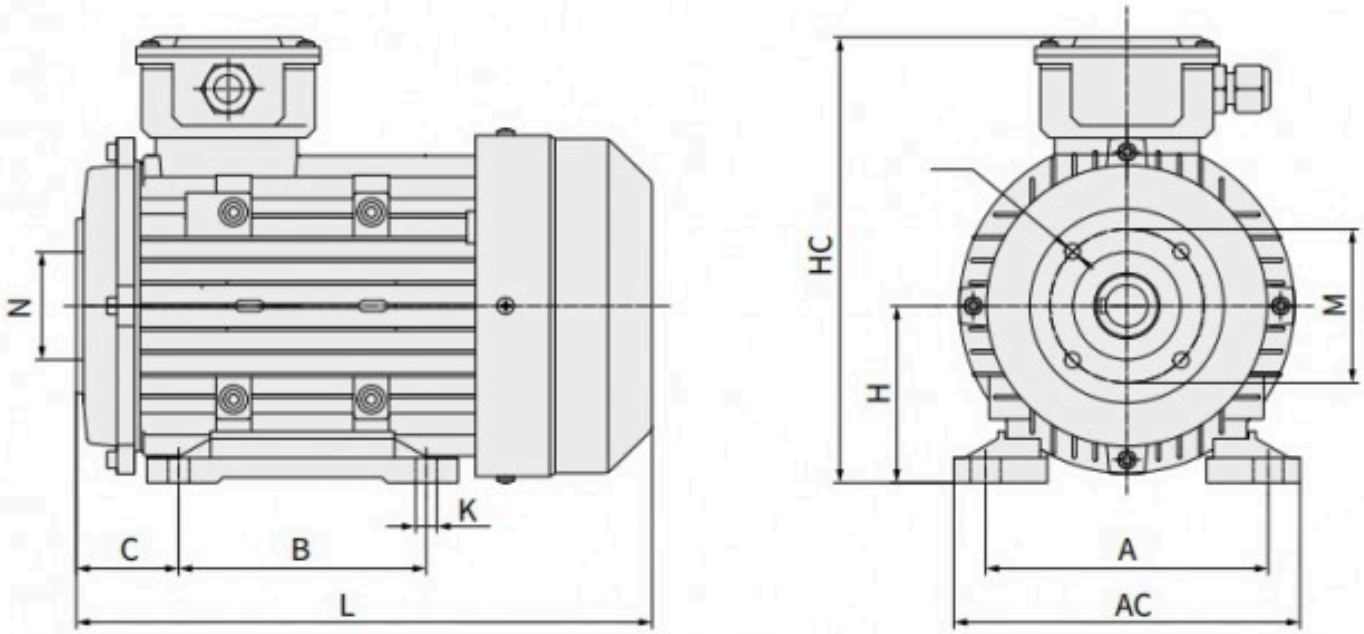

Frame Size	Flange			Frame						
	M	N	S	A	AC	B	H	HC	L	K
132S	75/87	90/61	9	216	326	140	132	320	370	12