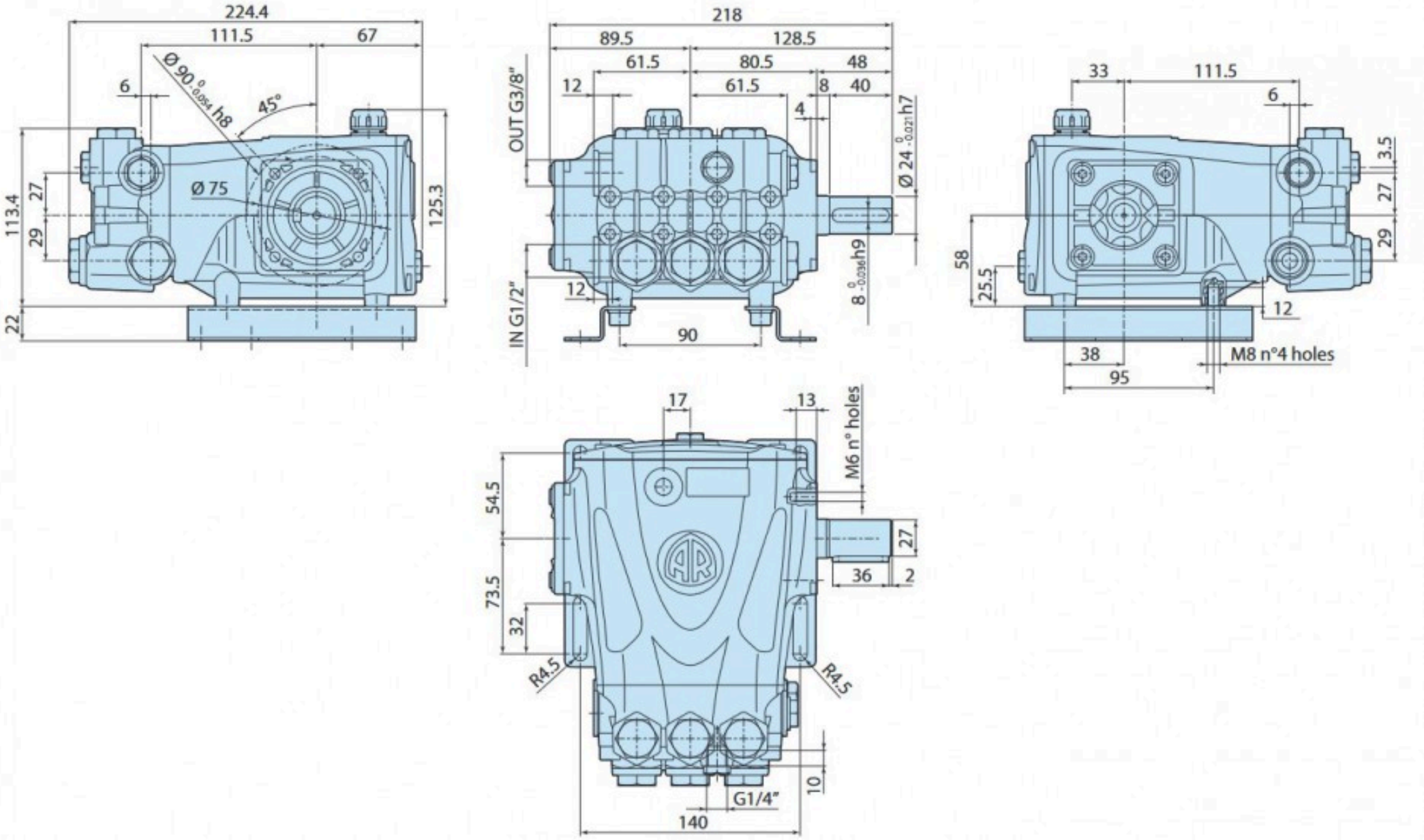
224.4
111.5
67
6
Ø 90 0 -0.054 h8
45°
Ø 75
113.4
27
29
22
125.3
218
89.5
128.5
61.5
80.5
48
12
61.5
8
40
4
OUT G3/8"
Ø 24 0 -0.021 h7
IN G1/2"
12
90
8 0 -0.036 h9
33
111.5
6
3.5
27
29
58
25.5
12
38
95
M8 n°4 holes
17
13
M6 n° holes
54.5
73.5
32
27
36
2
R4.5
R4.5
10
G1/4"
140