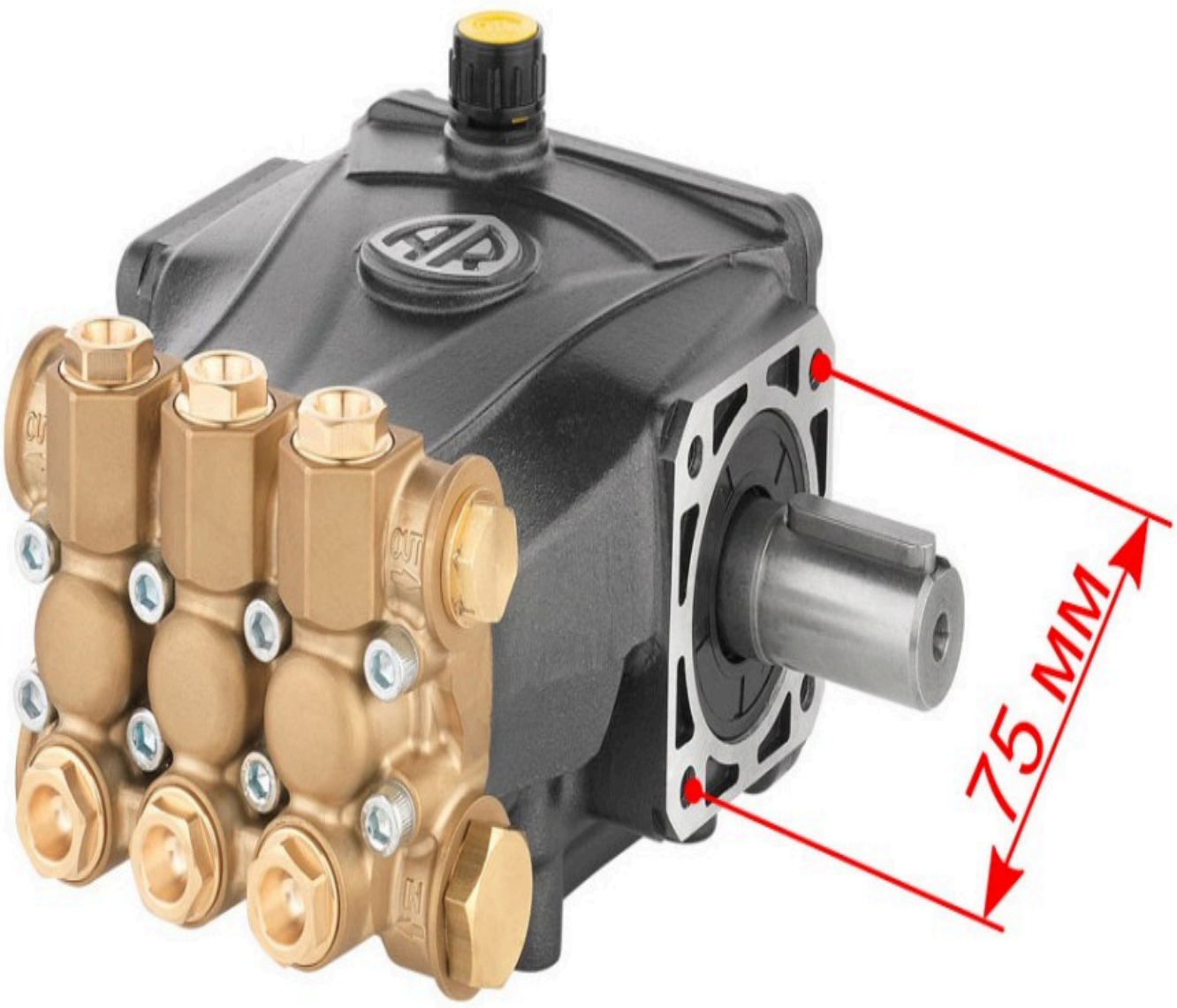
75 MM

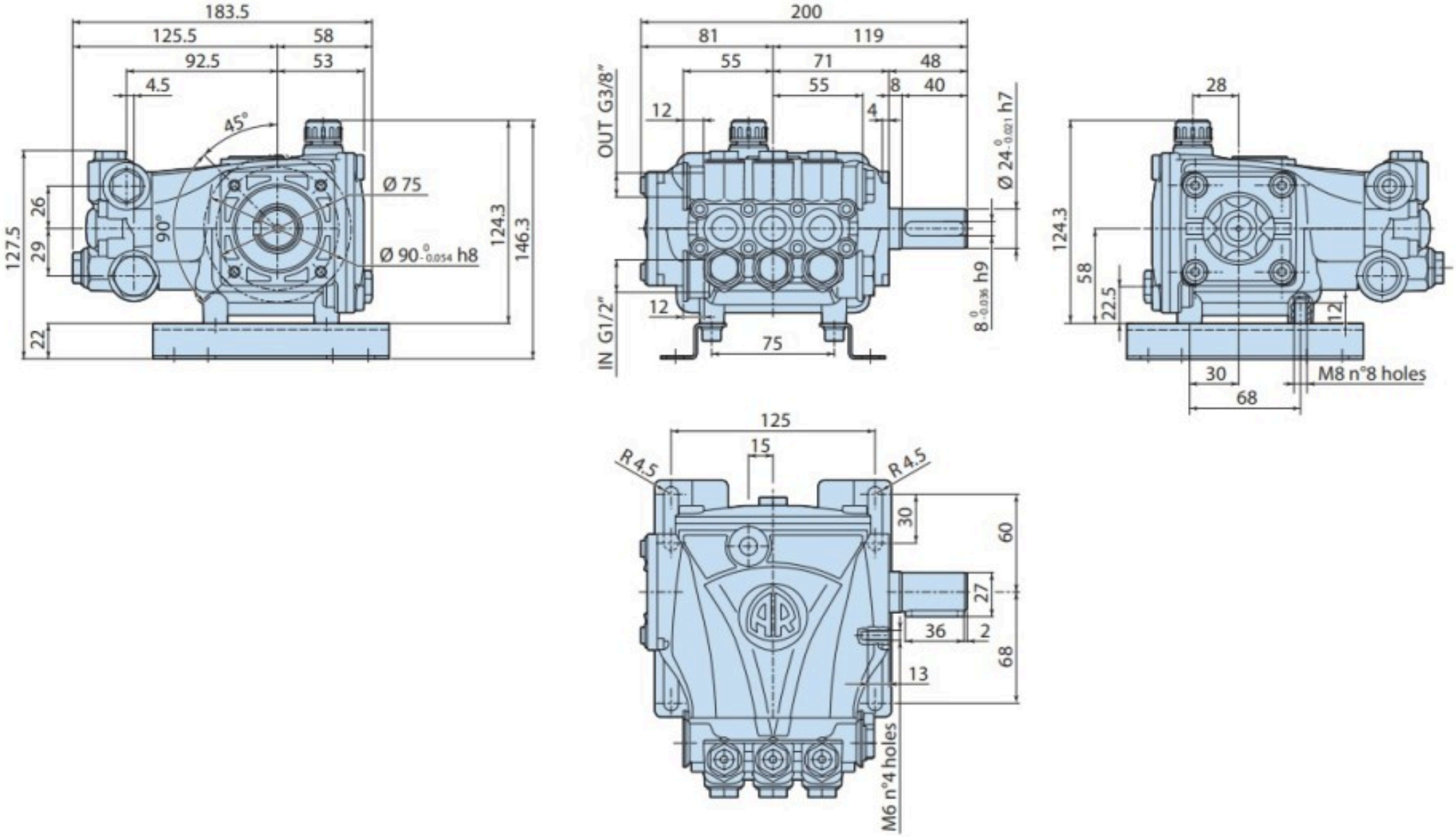
183.5
125.5
58
92.5
53
4.5
45°
Ø 75
Ø 90 0 -0.054 h8
127.5
26
29
90°
22
124.3
146.3
200
81
119
55
71
48
55
8
40
12
4
OUT G3/8"
IN G1/2"
12
75
Ø 24 0 -0.021 h7
8 0 -0.036 h9
28
124.3
58
22.5
12
30
68
M8 n°8 holes
125
15
R 4.5
R 4.5
30
60
27
36
2
68
13
M6 n°4 holes