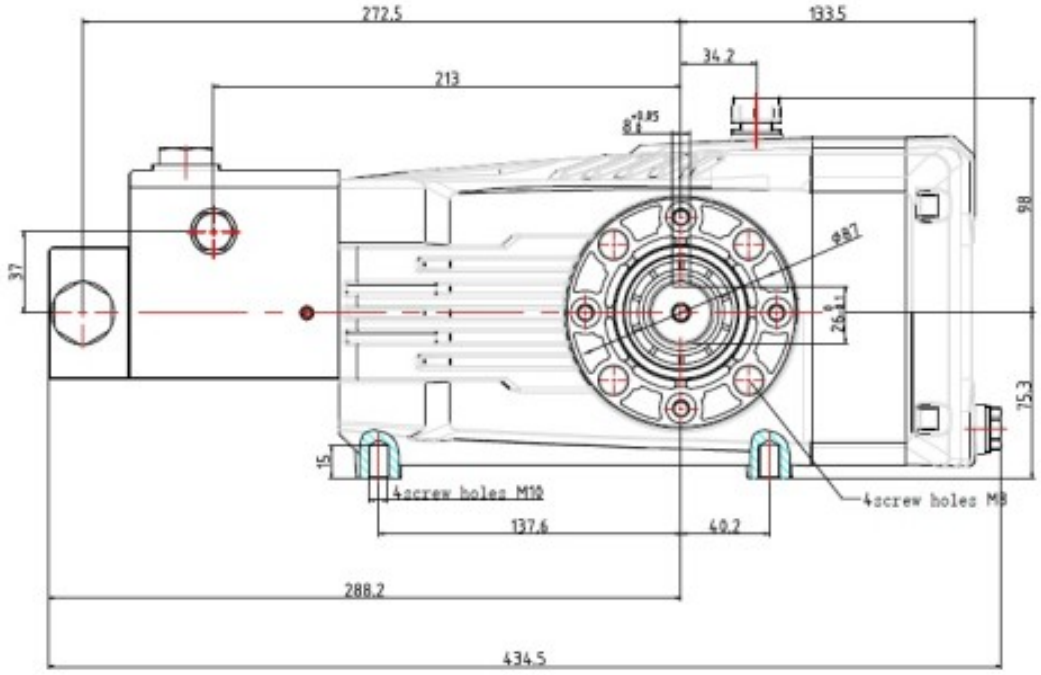
272.5
133.5
34.2
213
98
37
15
4screw holes M10
4screw holes M8
137.6
40.2
288.2
434.5

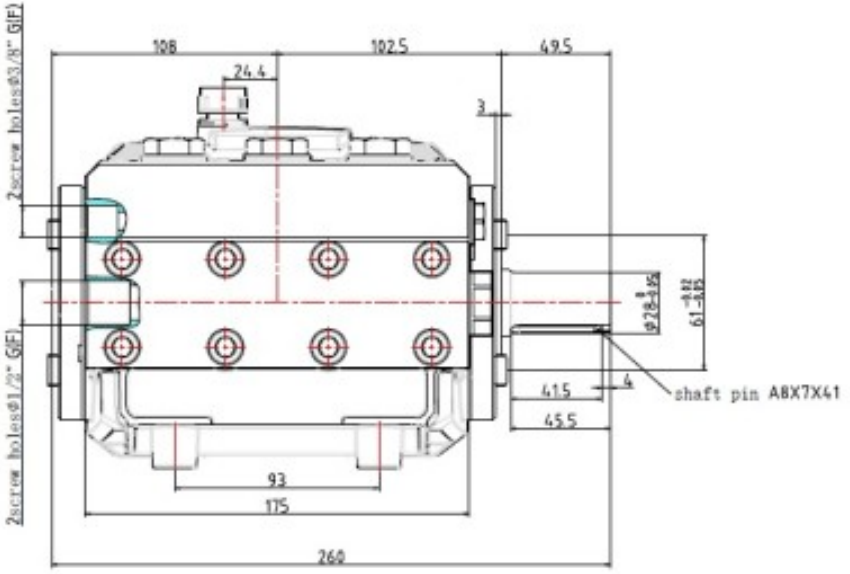
108
102.5
49.5
24.4
3
2screw holes⌀3/8" GIF)
2screw holes⌀1/2" GIF)
41.5
4
45.5
93
175
260
shaft pin A8X7X41