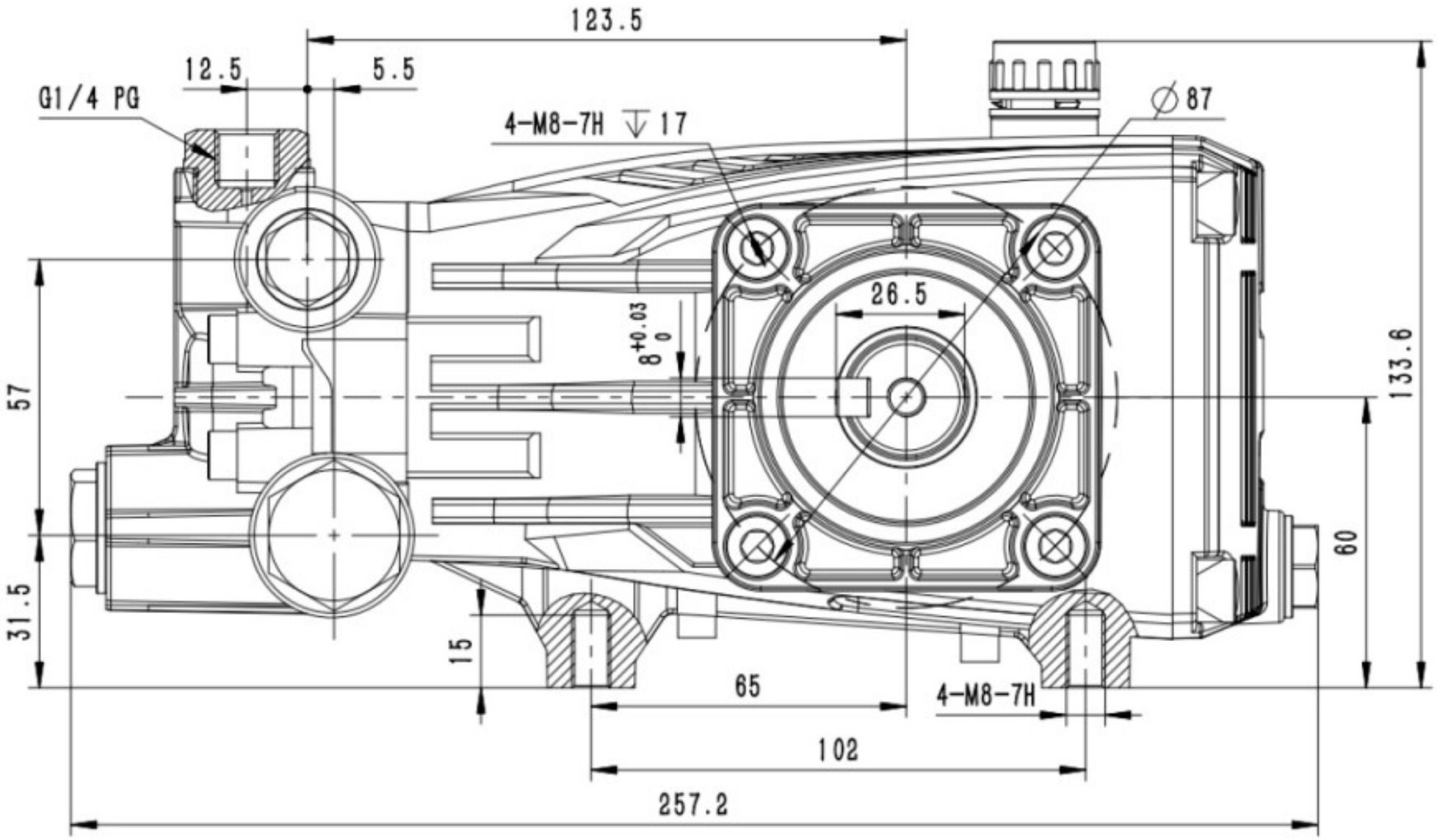
123.5
12.5
5.5
G1/4 PG
4-M8-7H ↧17
∅87
26.5
8 +0.03 0
57
31.5
15
65
4-M8-7H
102
257.2
133.6
60


87MM