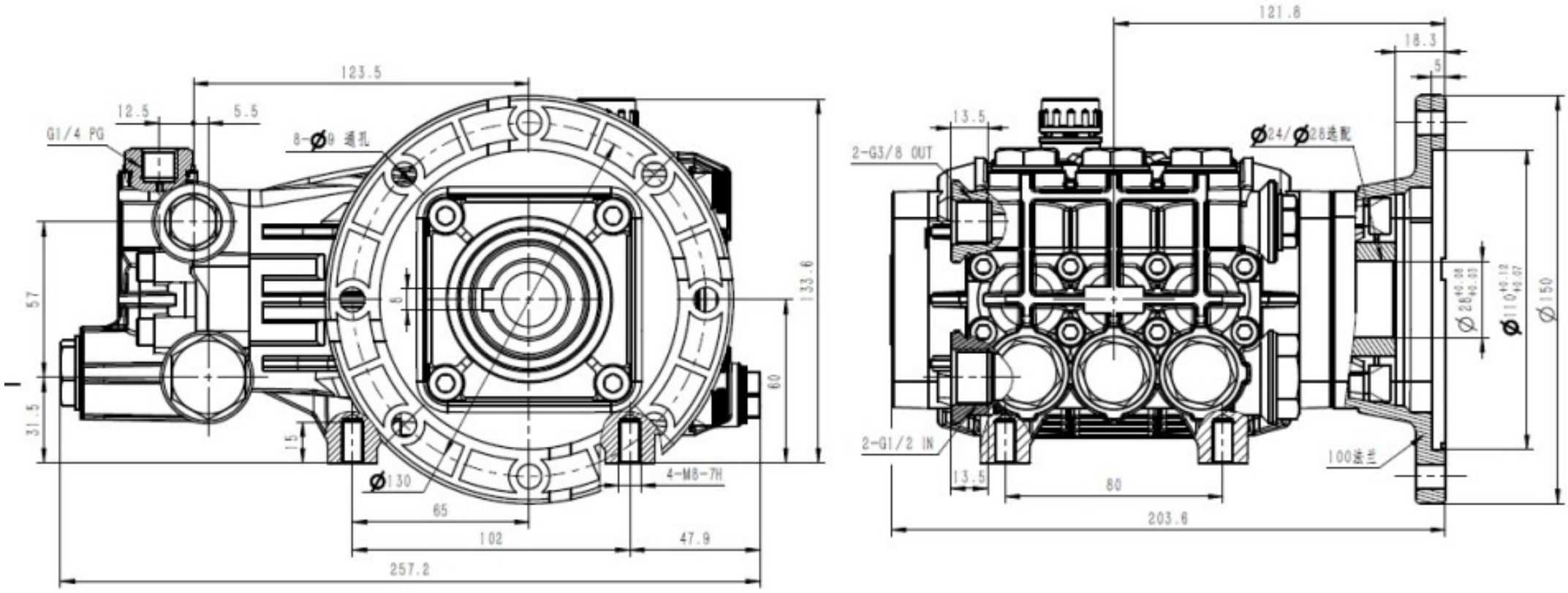
123.5
12.5
5.5
G1/4 PG
8-Ø9 通孔
57
31.5
15
133.6
60
Ø130
4-M8-7H
65
102
47.9
257.2
121.8
18.3
5
13.5
Ø24/Ø28选配
2-G3/8 OUT
2-G1/2 IN
13.5
80
203.6
100法兰
Ø150