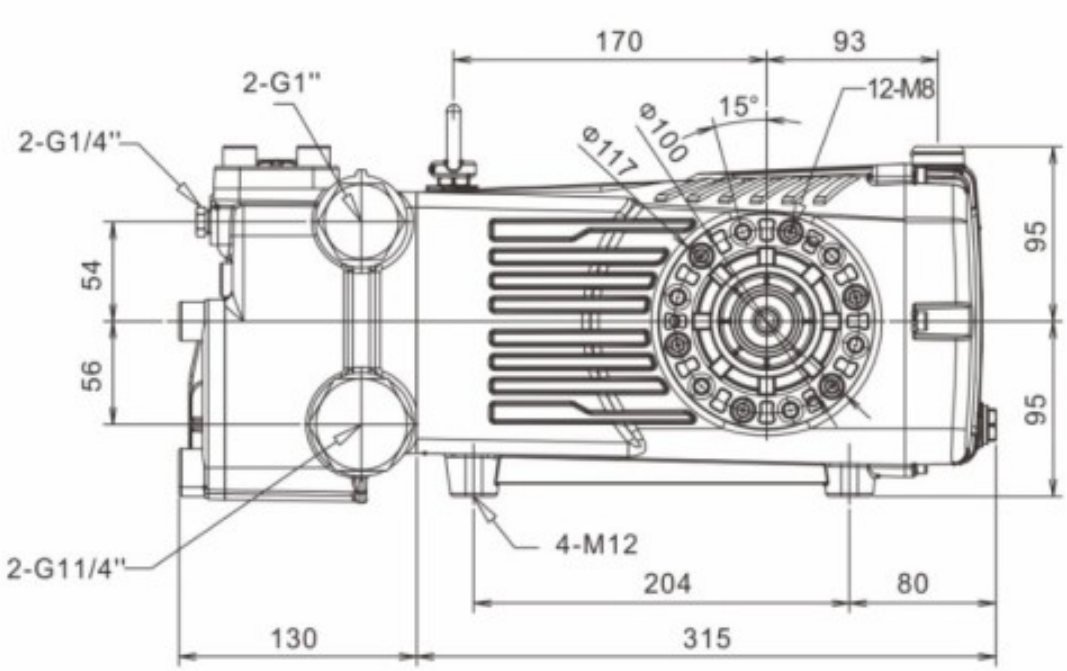
170
93
2-G1"
12-M8
15°
Φ100
Φ117
2-G1/4"
54
56
95
95
4-M12
2-G11/4"
204
80
130
315

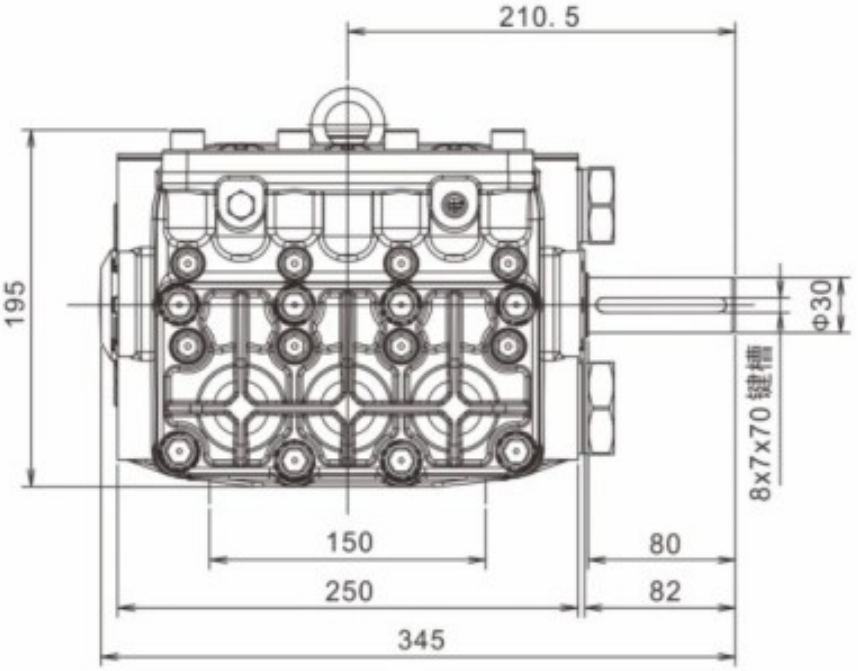
210. 5
195
Φ30
8x7x70 键槽
150
80
250
82
345