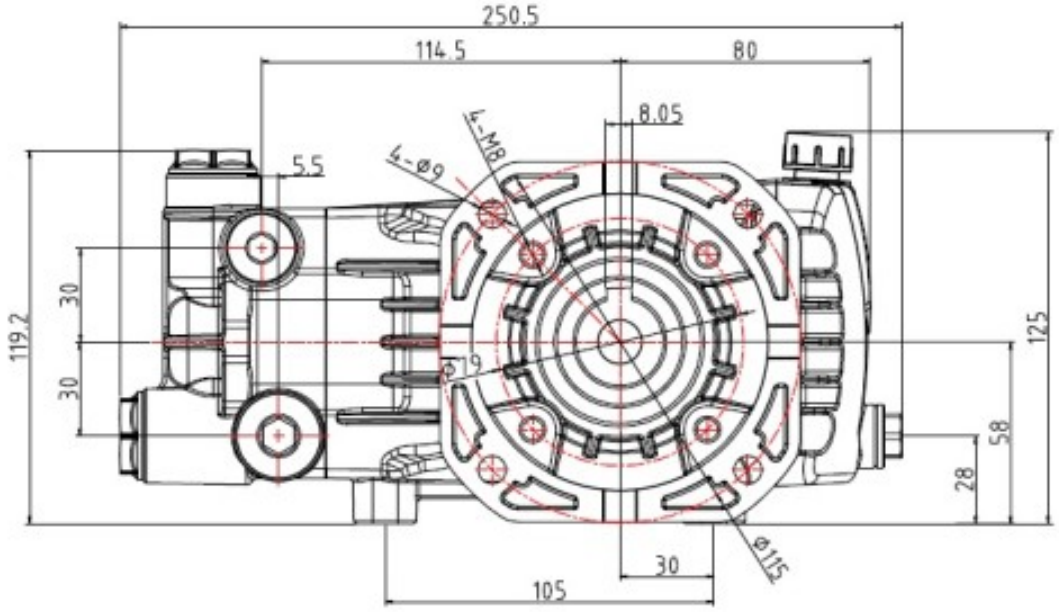
250.5
114.5
80
8.05
4-M8
4-ø9
5.5
119.2
30
30
ø79
125
58
28
ø115
30
105

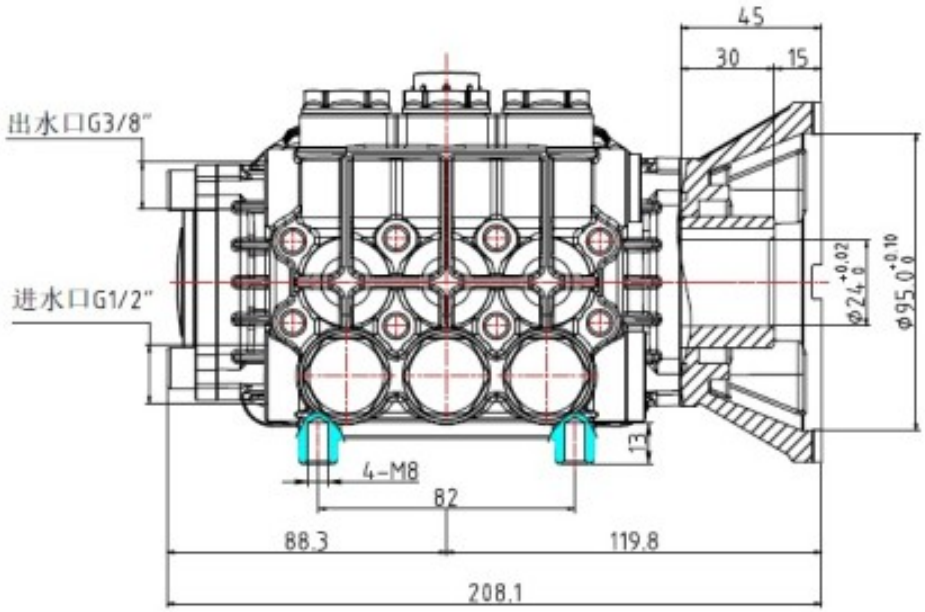
出水口G3/8"
进水口G1/2"
45
30
15
ø24.0 +0.02
ø95.0 +0.10 0
13
4-M8
82
88.3
119.8
208.1