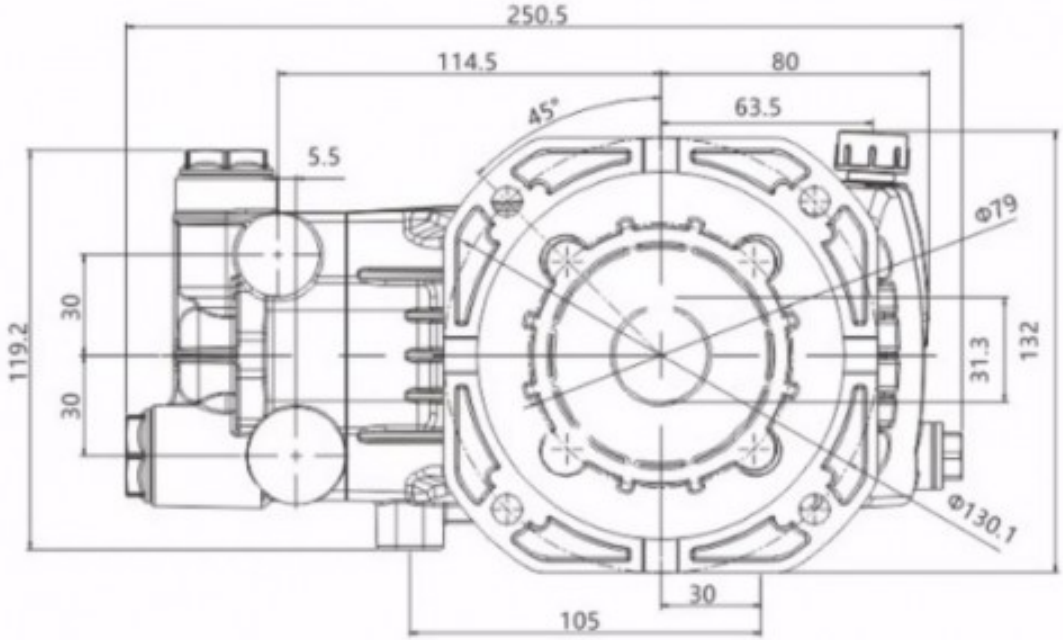
250.5
114.5
80
63.5
45°
5.5
119.2
30
30
Φ79
31.3
132
Φ130.1
30
105

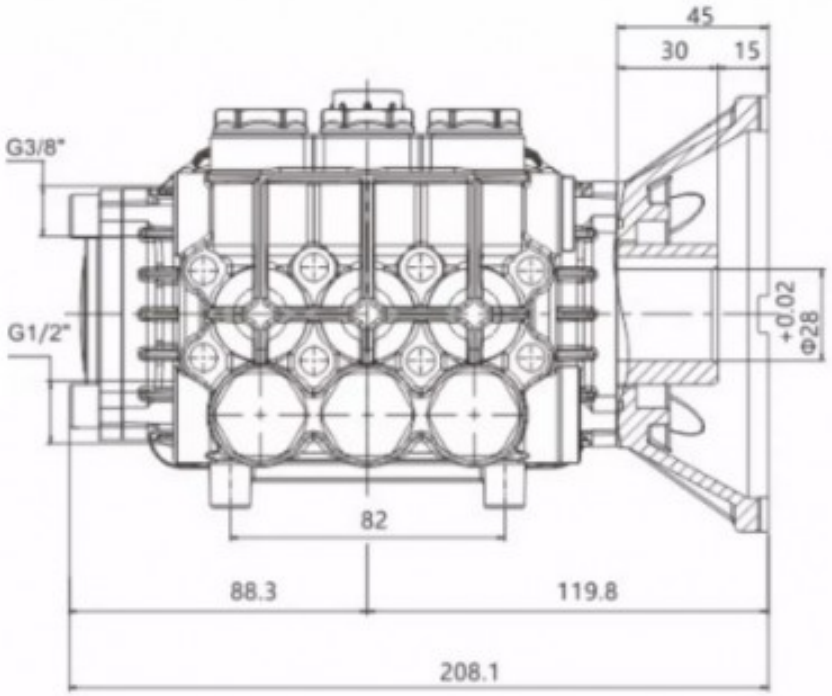
45
30
15
G3/8"
G1/2"
+0.02
Φ28
82
88.3
119.8
208.1