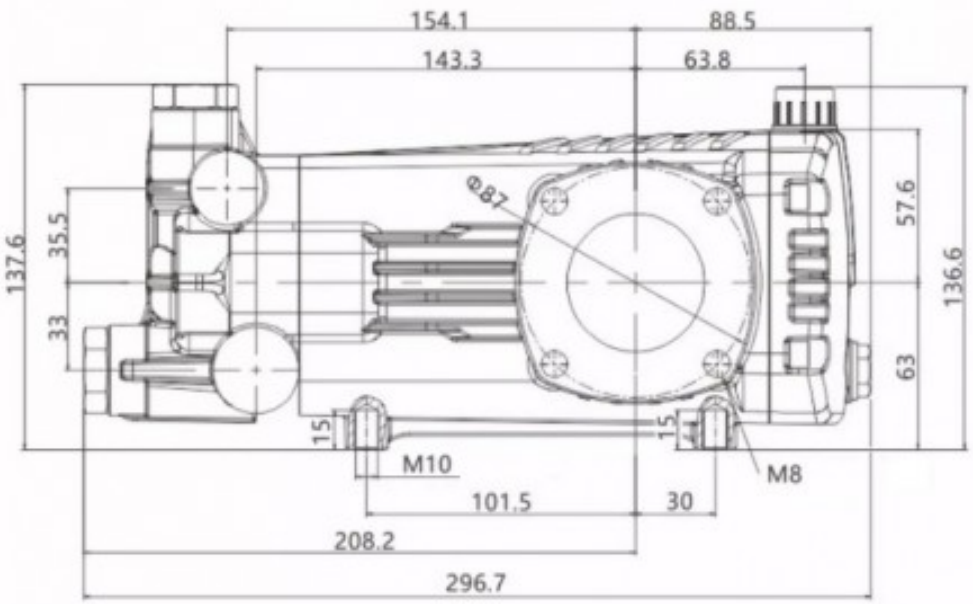
154.1
88.5
143.3
63.8
137.6
35.5
33
Φ87
57.6
136.6
63
15
15
M10
M8
101.5
30
208.2
296.7

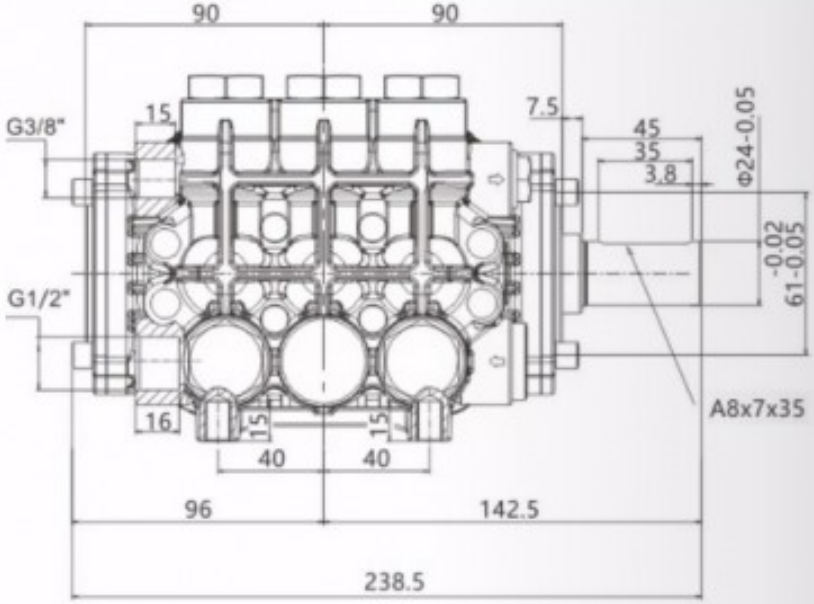
90
90
G3/8"
15
7.5
45
35
3.8
Φ24-0.05
-0.02
61-0.05
G1/2"
A8x7x35
16
15
15
40
40
96
142.5
238.5