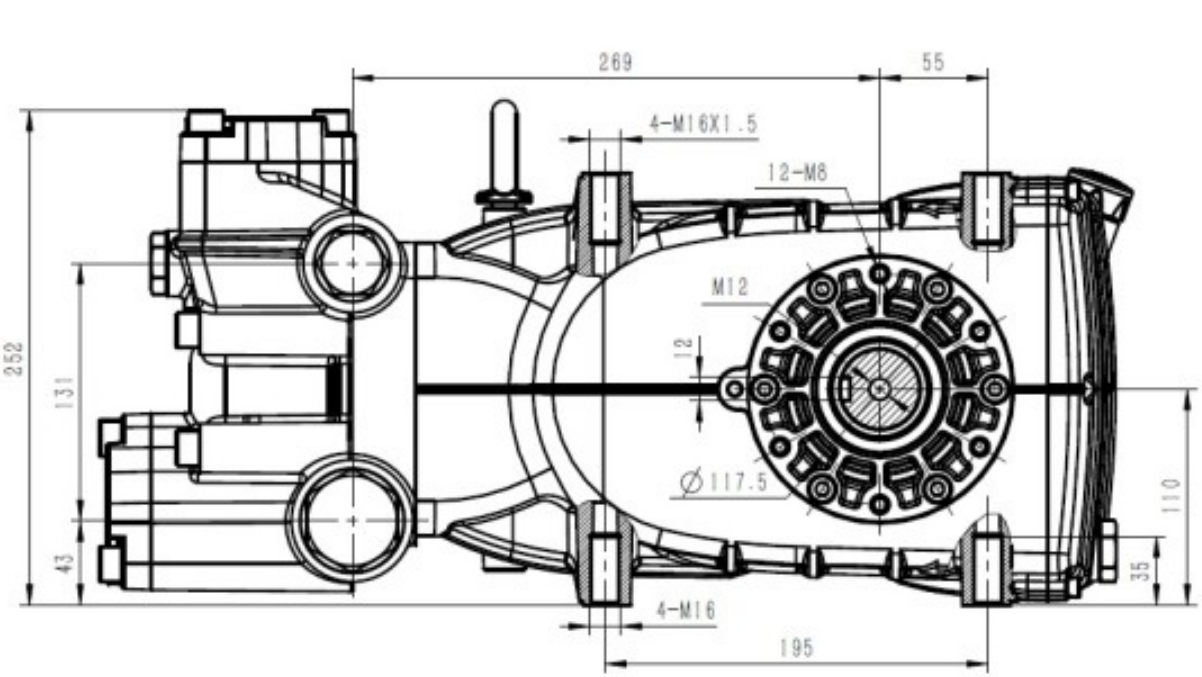
269
55
4-M16X1.5
12-M8
M12
12
Ø117.5
252
131
43
110
35
4-M16
195

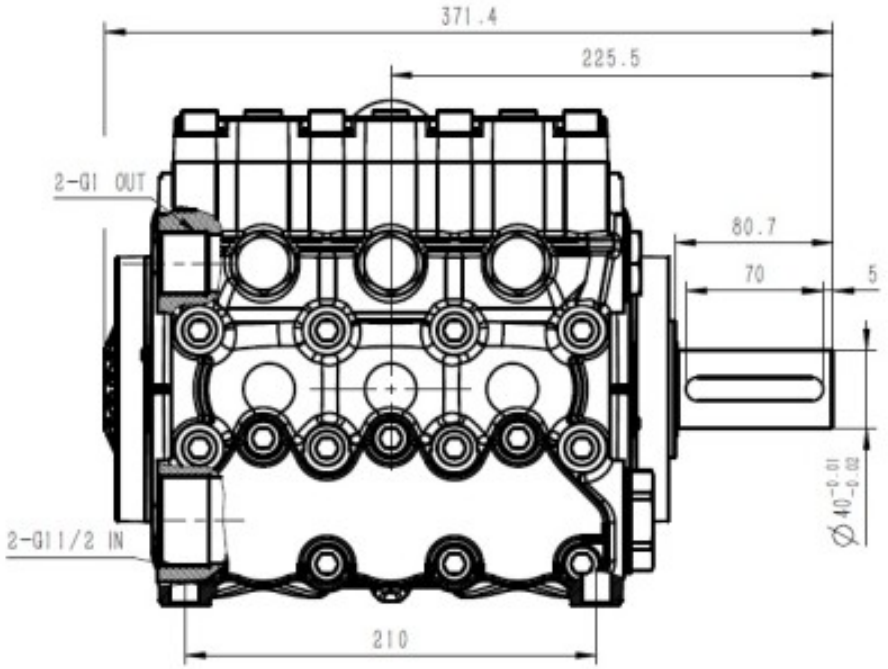
371.4
225.5
2-G1 OUT
80.7
70
5
2-G1 1/2 IN
210